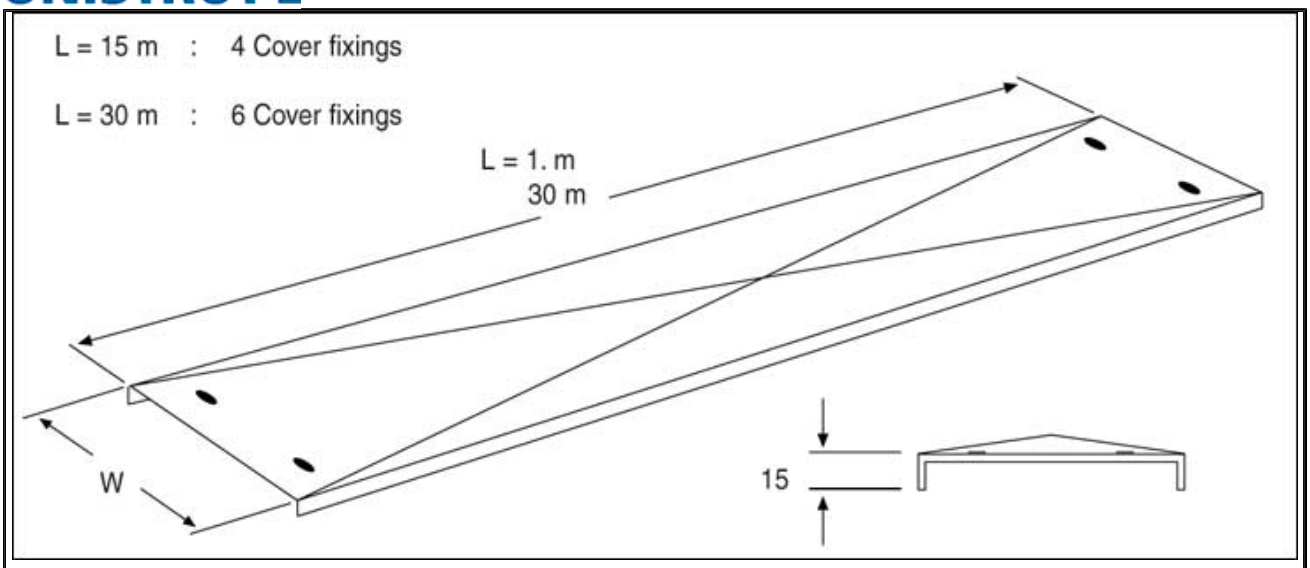

Part No.	Finish	Size	Length	Weight
TUCHL050	HG	50mm	3M	2.82
TUCHL075	HG	75mm	3M	2.82
TUCHL100	HG	100mm	3M	3.45
TUCHL150	HG	150mm	3M	4.71
TUCHL225	HG	225mm	3M	13.42
TUCHL300	HG	300mm	3M	12.89
TUCHL450	HG	450mm	1.5M	9.20
TUCHL600	HG	600mm	1.5M	12.60
TUCHL750	HG	750mm	1.5M	14.87
TUCHL900	HG	900mm	1.5M	17.71
TUCHL075	PG	75mm	3M	2.69
TUCHL100	PG	100mm	3M	3.29
TUCHL150	PG	150mm	3M	4.49
TUCHL225	PG	225mm	3M	9.43
TUCHL300	PG	300mm	3M	12.13
TUCHL450	PG	450mm	1.5M	8.77
TUCHL600	PG	600mm	1.5M	11.47
TUCHL750	PG	750mm	1.5M	14.17
TUCHL900	PG	900mm	1.5M	16.87
TUCHL075	SS	75mm	3M	2.74
TUCHL100	SS	100mm	3M	3.35
TUCHL150	SS	150mm	3M	4.58
TUCHL225	SS	225mm	3M	9.62
TUCHL300	SS	300mm	3M	12.38
TUCHL450	SS	450mm	1.5M	8.94
TUCHL600	SS	600mm	1.5M	11.70
TUCHL750	SS	750mm	1.5M	14.45
TUCHL900	SS	900mm	1.5M	17.20

Project: _____

Architect / Engineer: _____

Date: _____ **Phone:** _____

Contractor: _____

Address: _____

_____

Notes 1: _____

_____

Approval Stamp: