UNISTRUT P5500T

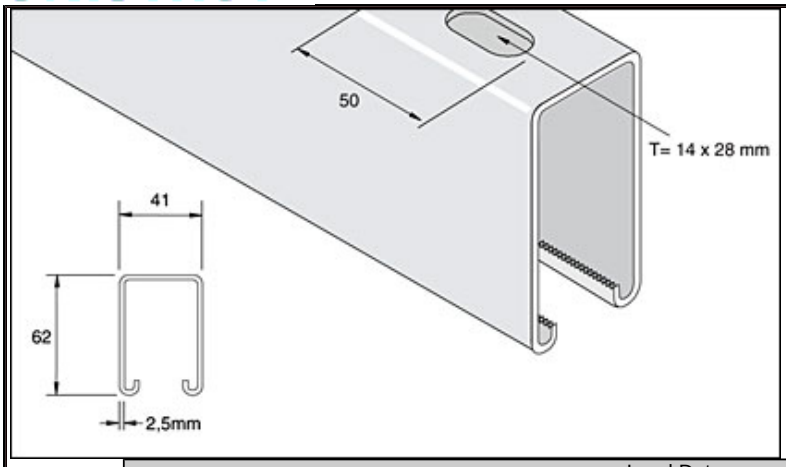

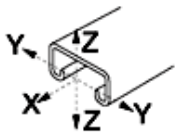

A (cm2)	/m (kg/m)	-
4.03	3.6	-
I y-y (cm4)	Z y-y (cm3)	r y-y (cm)
17.57	5.59	2.09
I z-z (cm4)	Z z-z (cm3)	r z-z (cm)
13.07	6.33	1.79

Load Data

L(mm)	σ=175 N/mm² F f Fmax(kN)	fmax(mm)	f=1/200L F (kN)	f=1/360L F (kN)	F(kN)	
250	-	-	-	-	20.277	
500	-	-	-	-	20.081	
750	9.928	1.50	-	-	18.443	
1000	7.446	2.67	-	-	15.245	
1250	5.955	4.18	-	4.944	12.557	
1500	4.964	6.02	-	3.434	10.507	
1750	4.248	8.19	-	2.521	8.966	
2000	3.718	10.70	3.473	1.923	7.789	
2250	3.306	13.55	2.747	1.521	6.867	
2500	2.972	16.73	2.217	1.236	6.141	
2750	2.708	20.24	1.834	1.020	5.543	
3000	2.482	24.09	1.540	0.853	5.042	

Part No.	Finish	Length	Weight
P5500TX3	HG	3M	10.81
P5500TX6	HG	6M	20.66
P5500TX3	PG	3M	9.76
P5500TX6	PG	6M	19.52

Project: A

Architect / Engineer: B

Date: C **Phone:** D

Contractor: E

Address: F

Notes 1: G

Approval Stamp: